Fig. 48-E (New 11/14)

TRACTOR-SCRAPER COMBINATION (CATERPILLAR 621G TRACTOR-SCRAPER COMBINATION), ARMORED CAB WITH PNEUMATIC TIRES, 80,000 LB OR LESS ON DODX RAILCAR

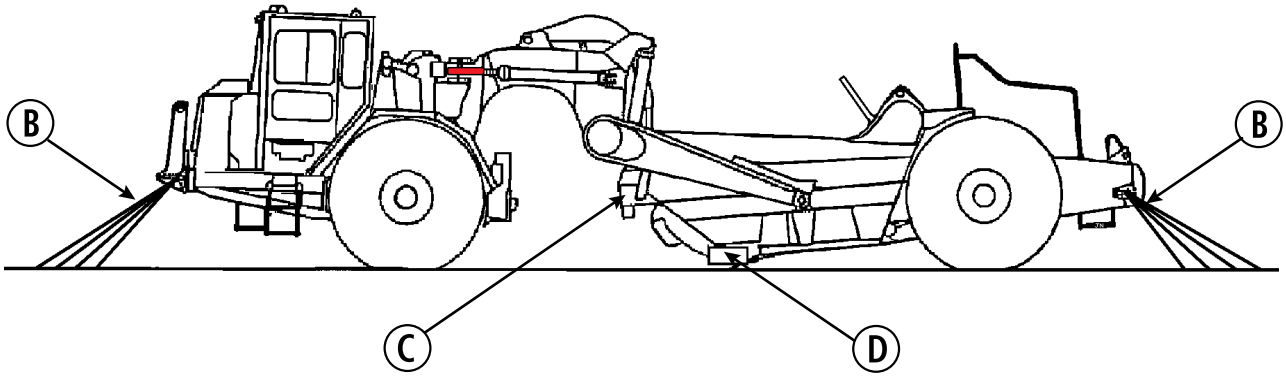

STEERING LOCK DETAIL

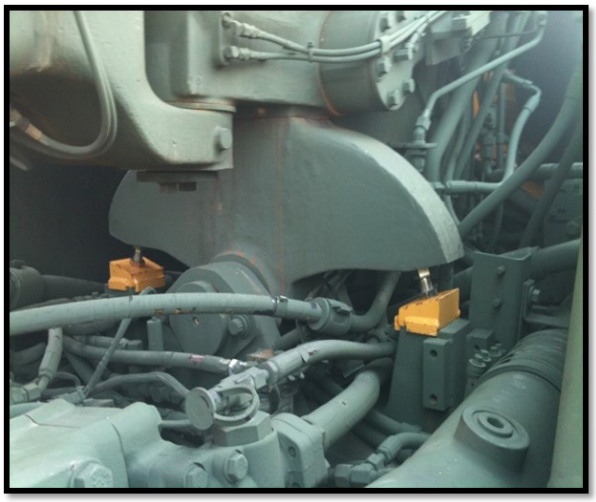

OSCILLATION LOCK DETAIL

Item	No. of Pcs.	Description
A		Brake wheel clearance: see General Rule 2 in Section 1.
B	16 each unit.	1/2 in. diameter alloy steel chain, extra strength, minimum breaking strength of 55,000 lb
C	2 each unit.	1/2 in. diameter alloy steel chain, extra strength, minimum breaking strength of 55,000 lb
D	2 per unit.	Lumber: 8 in. × 30 in., thickness to suit. Locate between scraper blade and car floor. Secure each to car floor with four common nails 2 in. longer than thickness of board.

Notes and Additional Requirements:

1. Tie-downs in the inboard and outboard channels are to be in line across the car. The angle of tie-downs must be as close to 45° as possible.
2. Turnbuckles not equipped with self-locking devices must be wired or locked to prevent loosening.
3. Additional chains may be added for lateral stability.
4. Tie-down chains must be free from twisted or kinked links prior to their application to the vehicle.
5. Open hooks must be secured with wire over the opening to prevent hook from becoming disengaged from the chain link to which it is secured.
6. Transmission shall be in neutral. Set the parking brake (if it is available and operational) to prevent the vehicle from inadvertently moving during the securement and unloading processes.
7. Blade must rest on Item D.
8. Locking devices (three) must be in place prior to commencing any lifting operations. See Oscillation Lock and Steering Lock Detail photos.

Reference the General Rules in Section No. 1 of the *Open Top Loading Rules Manual* for additional details.

Fig. 48-F (New 03/16)

EXCAVATORS, CRAWLER, ARMORED, 67,300 LB OR LESS WITH BOOM ATTACHED—FLATCARS, WITH CHAIN TIE-DOWN ASSEMBLY AND CUSHIONING DEVICES

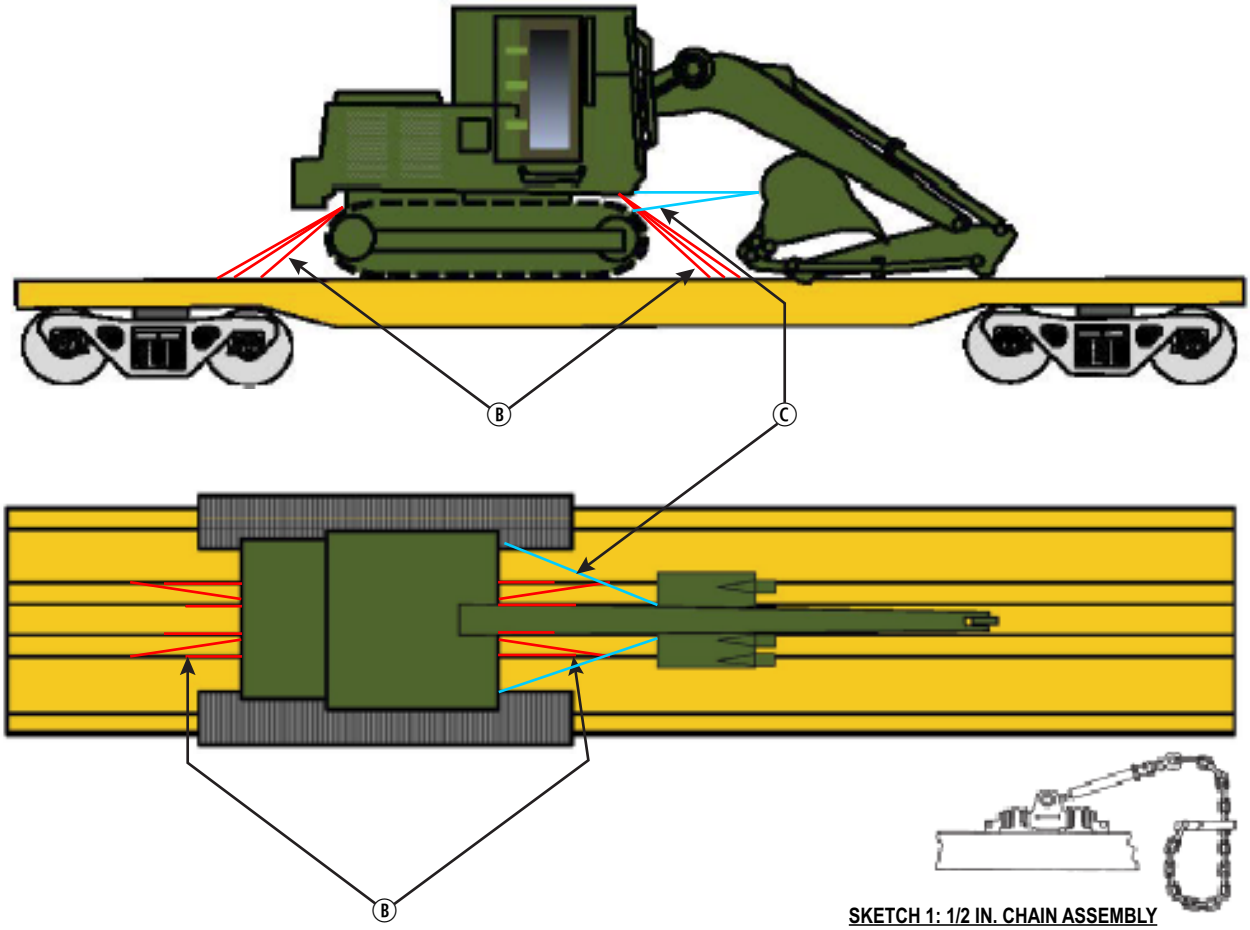

SKETCH 1: 1/2 IN. CHAIN ASSEMBLY

PHOTO 1: TIE-DOWN POINTS FOR BUCKET

IMPLEMENTED 03/2016

Fig. 48-F (New 03/16) (Concluded)

EXCAVATORS, CRAWLER, ARMORED, 67,300 LB OR LESS WITH BOOM ATTACHED—FLATCARS, WITH CHAIN TIE-DOWN ASSEMBLY AND CUSHIONING DEVICES

Item	No. of Pcs.	Description
A		Brake wheel clearance: see General Rule 2 in Section 1.
B	12	Alloy tie-down chain assembly: 1/2 in. with a minimum breaking strength of 55,000 lb. Locate six assemblies at the counterweight end of the excavator and six assemblies at the front end.
C	2	3/8 in. 6 × 19 IWRC IPS wire rope, doubled (complete loop). Connect supplemental air tie-downs on the inside of the crawler frames to the tie-down point behind the bucket.

Notes and Additional Requirements:

1. .Pull chains as tightly as possible by hand and attach hook into appropriate link in the chain. All chain tie-downs must be made taut by tightening the turnbuckles. After chains are tightened, strike them with a hammer or bar to eliminate any possible mis-alignment of links. Further tightening may be required to take up any slack that develops due to link alignment.
2. All tie-down assemblies shall be in-line across the car. The angle of tie-downs must be as close to 45° as possible.
3. Gear shift levers shall be placed in a neutral position.
4. Turnbuckles not equipped with self-locking devices must be wired or locked to prevent loosening.
5. If metal-tracked vehicles are loaded on metal-decked cars, they must be loaded on plywood. Plywood should also be placed between the bucket and the metal deck.

Reference the General Rules in Section No. 1 of the *Open Top Loading Rules Manual* for additional details.

IMPLEMENTED 03/2016

Fig. 48-G (New 03/16)

DOZERS, D7R TYPE I AND TYPE II WITH ATTACHMENTS AND CAB, 50,550 LB TO 58,000 LB INCLUSIVE, FLATCARS, WITH CHAIN TIE-DOWNS AND CUSHIONING DEVICES

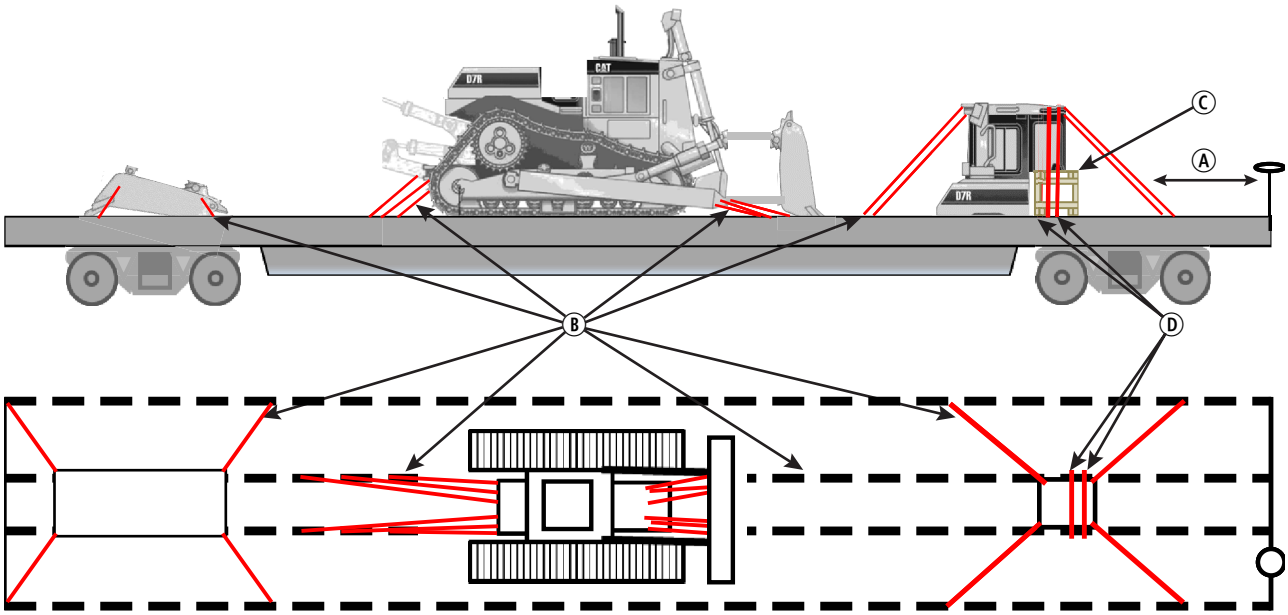

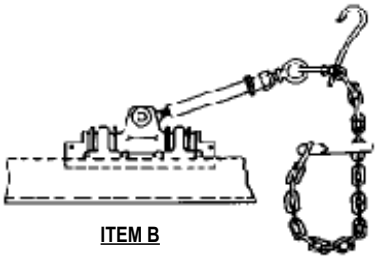

ITEM B

Item	No. of Pcs.	Description
A		Brake wheel clearance: see General Rule 2 in Section 1.
B	4 each unit.	1/2 in. diameter alloy steel chain, extra strength, minimum MBS of 55,000 lb for items/attachments weighing up to 25,250 lb, inclusive.
	8 each unit.	For items/attachments weighing over 25,250 lb to 50,500 lb, inclusive.
	12 each unit.	For vehicles/items/attachments weighing over 50,500 lb to 58,000 lb, inclusive.
C	1 per cab.	Cab dunnage. See Drawing 1.
D	2 each unit.	Encircling bands: minimum 1/2 in. × 0.020 Type 1 heavy-duty steel bands (MBS 1,280 lb) around cab and dunnage (Item C).

IMPLEMENTED 03/2016

Fig. 48-G (New 03/16) (Continued)

DOZERS, D7R TYPE I AND TYPE II WITH ATTACHMENTS AND CAB, 50,550 LB TO 58,000 LB INCLUSIVE, FLATCARS, WITH CHAIN TIE-DOWNS AND CUSHIONING DEVICES

PHOTO 1: D7R DOZER WITH RIPPER ATTACHED CHAIN TIE-DOWNS (ITEM B)

PHOTOS 2 AND 3: CHAIN TIE-DOWNS (ITEM B) ON D7R WITH RIPPER

PHOTO 4: RIPPER BLADE, 5,190 LB, TIED DOWN WITH ITEM B

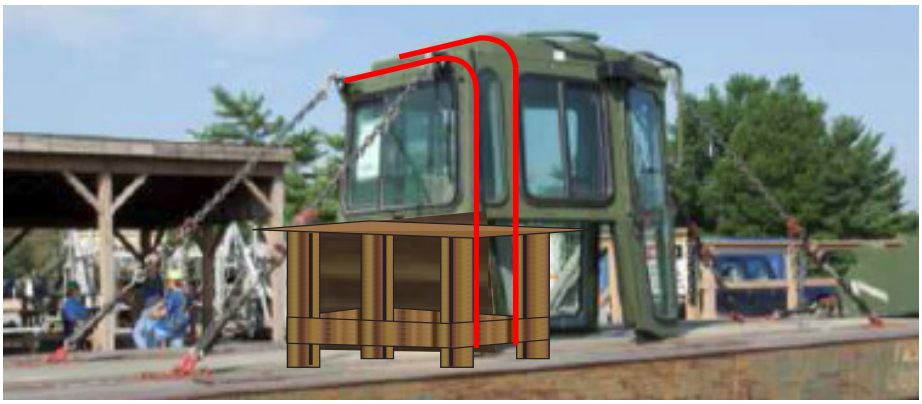

PHOTO 5: CAB, TIED DOWN WITH ITEM B, AND DUNNAGE (ITEM C) SECURED TO CAB WITH ITEM D

IMPLEMENTED 03/2016

Fig. 48-G (New 03/16) (Continued)

DOZERS, D7R TYPE I AND TYPE II WITH ATTACHMENTS AND CAB, 50,550 LB TO 58,000 LB INCLUSIVE, FLATCARS, WITH CHAIN TIE-DOWNS AND CUSHIONING DEVICES

DUNNAGE FOR D7R CAB

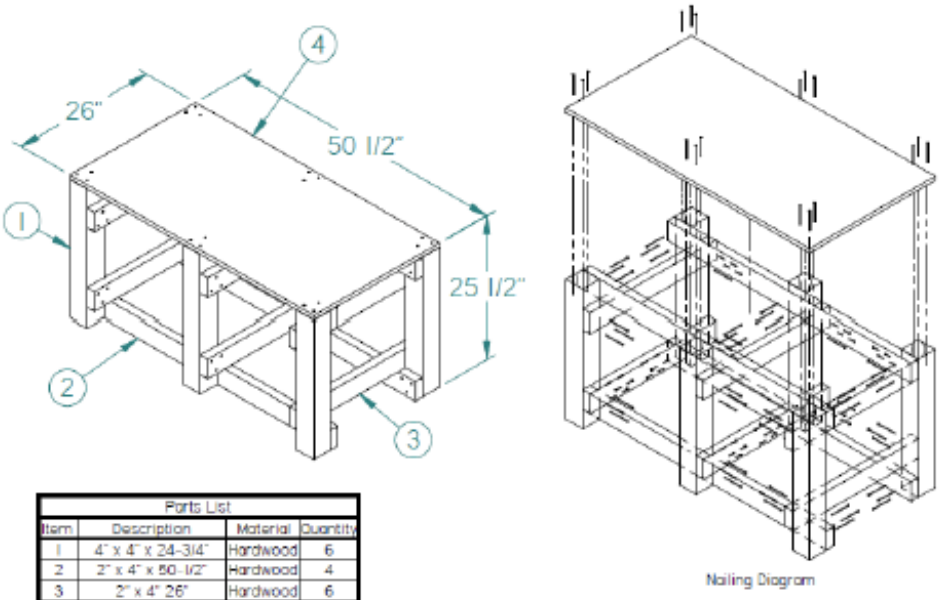

Parts List			
Item	Description	Material	Quantity
1	4" x 4" x 24-3/4"	Hardwood	6
2	2" x 4" x 50-1/2"	Hardwood	4
3	2" x 4" 26"	Hardwood	6
4	26" x 50-1/2" x 3/4"	Plywood	1
Nails	16d	N/A	90

AAR OTLRs Section 1 Appendix D1 Hardwoods

DRAWING 1: CAB DUNNAGE SPECIFICATIONS (ITEM D)

PHOTO 6: D7R PUSH BEAM 1,280 LB TIED DOWN WITH ITEM B AND WIRE ROPE TO SECURE MOVEABLE ELEMENT

IMPLEMENTED 03/2016

Fig. 48-G (New 03/16) (Concluded)

DOZERS, D7R TYPE I AND TYPE II WITH ATTACHMENTS AND CAB, 50,550 LB TO 58,000 LB INCLUSIVE, FLATCARS, WITH CHAIN TIE-DOWNS AND CUSHIONING DEVICES

PHOTO 7: ROPS 1,045 LB, TIED DOWN WITH ITEM B

PHOTOS 8 AND 9: ARMORED CAB IN TRICON, TIED DOWN WITH ITEM B

Item	No. of Pcs.	Description

Notes and Additional Requirements:

1. Tie-downs in the inboard and outboard channels shall be in-line across the car. The angle of tie-downs must be as close to 45° as possible.
2. Turnbuckles not equipped with self-locking devices must be wired or locked to prevent loosening.
3. Additional chains may be added for lateral stability.
4. Tie-down chains must be free from twisted or kinked links prior to their application to the vehicle.
5. Restrain movable element on push beam with wire rope to prevent movement.
6. Open hooks must be secured with wire over the opening to prevent hook from becoming disengaged from the chain link to which it is secured.
7. Transmission shall be in neutral. Set the parking brake (if it is available and operational) to prevent the vehicle from inadvertently moving during the securement and unloading processes.
8. On vehicles equipped with movable booms, apply a 3/8 in. IWRC IPS wire rope, doubled (complete loop), around the boom and secure to vehicle to prevent movement. Protection must be applied at tie-down points when sharp edges are present. Secure with two cable clips. Substitution with wire or banding is not authorized.

Reference the General Rules in Section No. 1 of the *Open Top Loading Rules Manual* for additional details.

IMPLEMENTED 03/2016

Fig. 49 (Rev. 07/07)
(New 2/60)

Archived 03/2013

TRUCKS, 1/4 TON, 4 × 4, LENGTHWISE, SINGLE OR DOUBLE ROWS—FLATCARS, SINGLE ROWS AND GONDOLAS, WITH WOOD FLOORS